MM® SSS Series Expansion Joint

Stainless Steel Seismic Slide Plate System

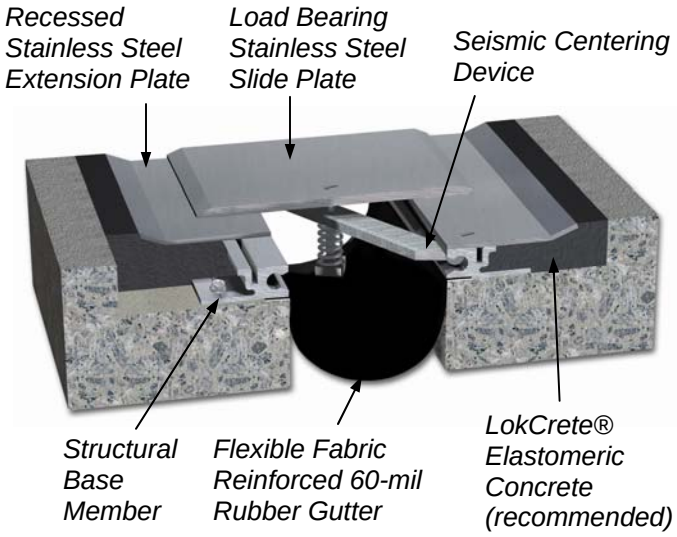

DESCRIPTION

The SSS Series is designed for wide expansion joint openings with the ability to accommodate heavy loading and multi-directional seismic movement. Recessed extension plates allow the seismic slide plate to remain flush with finished deck surface. A seismic centering device with impact dampers and displacement springs allow the slide plate to displace and return to its natural position after a seismic occurrence. The stainless steel slide plate provides maximum load bearing capacity. The moisture barrier in conjunction LokCrete® Elastomeric Concrete enhance the system's waterproofing capability.

BASIC USE

SSS is a traffic bearing expansion joint for parking structures (convention centers, concourse areas, etc.) and other open-air structures requiring seismic movement capability. Contact MM for SNB Series "no-bump" interior design, SSP Series aluminum cover design and STS surface mounted cover design.

FEATURES

- For wide joints with multi-directional seismic movement.
- AASHTO HS-20 load carrying capability.
- Heavy-duty aluminum base members with interlocking frame design insures proper alignment.
- Fabric reinforced rubber gutter provides added moisture protection.
- Recessed extension plates allow for a smooth slab-to-slab transition.
- Complies with ADA guidelines.

SPECIAL FEATURES

- Stainless steel slide plate available with Pedi-Grip slip-resistant surface treatment.
- Solid aluminum seismic centering device with dynamic load impact damper. (Not plastic)
- LokCrete® - hard, elastic, abrasion resistant embed material that flexes with deck loads.
- Fire Barriers - MM expansion joint systems are available with 2 - 4 hour fire performance ratings.

STORAGE

- LokCrete should be stored in a cool, dry location 60-80°F (15-27°C).

SEISMIC CENTERING DEVICE

Structural bar, solid aluminum ball ends, impact dampener and adjustable single or dual tension springs.

PACKAGING

Aluminum and Stainless Steel members in 10-foot lengths shipped on wooden pallets.

LokCrete is supplied in pre-measured Part A, B and C components.

Accessories packaged in cardboard cartons.

PRECAUTIONS

LokCrete - Use splash goggles and chemical resistant gloves to avoid prolonged or repeated skin contact. Use with adequate ventilation. In case of eye contact, immediately flush (low pressure) with lukewarm water. In case of skin contact, immediately wash skin with soap and water. Read and follow labels and Material Safety Data Sheet before use.

LIMITATIONS

- Concrete blockouts must be properly formed, finished and have sound substrate.
- Joints located in turning lanes or exposed to forktruck traffic must be engineered for greater impact loads – contact MM Systems.

SPEC DATA
MM Systems Corporation • 50 MM Way, Pendergrass, GA 30567 • 866.506.6929 • www.mm-usa.com

MM SSS Series Expansion Joint

SELECTION GUIDE

Model Number	Total Movement		Joint Opening "A" Seismic Min.		Nominal		Seismic Max.		Slide Plate "B"		Blockout "C"	
SSS-400	**5.0**	127	**1.0**	25	4	102	**6.0**	152	**8.0**	203	**4.5**	114
SSS-600	**8.0**	203	**1.0**	25	6	152	**9.0**	229	**11.0**	279	**5.5**	140
SSS-800	**11.0**	279	**1.0**	25	8	203	**12.0**	305	**14.0**	356	**6.5**	165
SSS-1000	**14.0**	356	**1.0**	25	10	254	**15.0**	381	**17.0**	432	**7.5**	191
SSS-1200	**17.0**	432	**1.0**	25	12	305	**18.0**	457	**20.0**	508	**8.5**	216
SSS-C-400	**3.25**	83	**1.75**	44	4	102	**5.0**	127	**6.0**	152	**4.5**	114
SSS-C-600	**5.75**	146	**1.75**	44	6	152	**7.5**	191	**8.5**	216	**5.5**	140
SSS-C-800	**8.25**	210	**1.75**	44	8	203	**10.0**	254	**11.0**	279	**6.5**	165
SSS-C-1000	**10.75**	273	**1.75**	44	10	254	**12.5**	318	**13.5**	343	**7.5**	191
SSS-C-1200	**13.25**	337	**1.75**	44	12	305	**15.0**	381	**15.5**	394	**8.5**	216

*Dimensions are shown in **inches** (bold) and millimeters. Contact MM Systems for larger sizes.*
Note: SSS-1200 requires a ½" thick cover and a 2" deep blockout. All other covers are 3/8" thick.
SSP-1000 & SSP-1200 Series require extra heavy duty base frame (not shown).

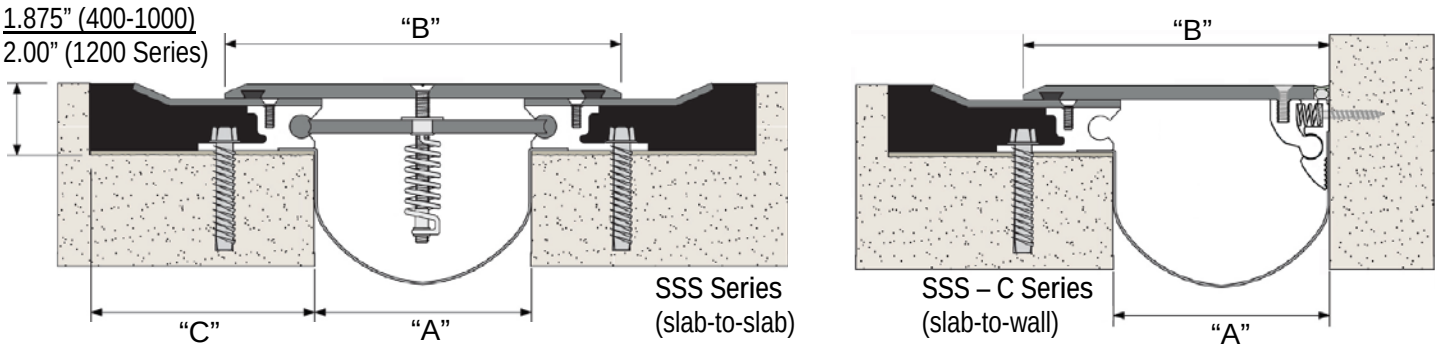

LIMITED WARRANTY

MM Systems warrants the MM Stainless Steel Seismic Slide Plate System to be free of defects in material and conform to technical data listed. We make no warranty as to color or appearance. Since methods of application can affect performance and on site conditions are beyond our control, MM Systems makes no other warranty, expressed or implied, including warranties of MERCHANTABILITY AND FITNESS FOR A PARTICULAR PURPOSE. MM Systems sole obligation shall be, at its option, to replace, or to refund the purchase price of the quantity of system proved to be defective. In no event shall MM Systems be liable for any special, incidental, consequential, loss of profits or punitive damages. Other warranties may be available when installed by a MM Certified Contractor.

INSTALLATION

1) Remove and repair all unsound concrete in and around the blockout. All spalls must be repaired with compatible patching material.
2) Prepare substrate by sandblasting. The blockout must be clean and dry prior to installation of LokCrete Elastomeric Concrete (blockout filler).
3) Install base member with expansion anchor.
4) Mask-off top of deck parallel with edge of blockout and top of aluminum base member.
5) Backfill blockout with infill material (LokCrete recommended) up to the height of the concrete blockout.
6) Immediately attach extension plates (remove duct tape).
7) Install seismic centering devices and slide plate with impact dampener.
8) Torque hardware per the SSS Installation Guideline.
9) Refer to the SSS Installation Guideline for detailed step-by-step instructions.

Current Issue 4-11-11