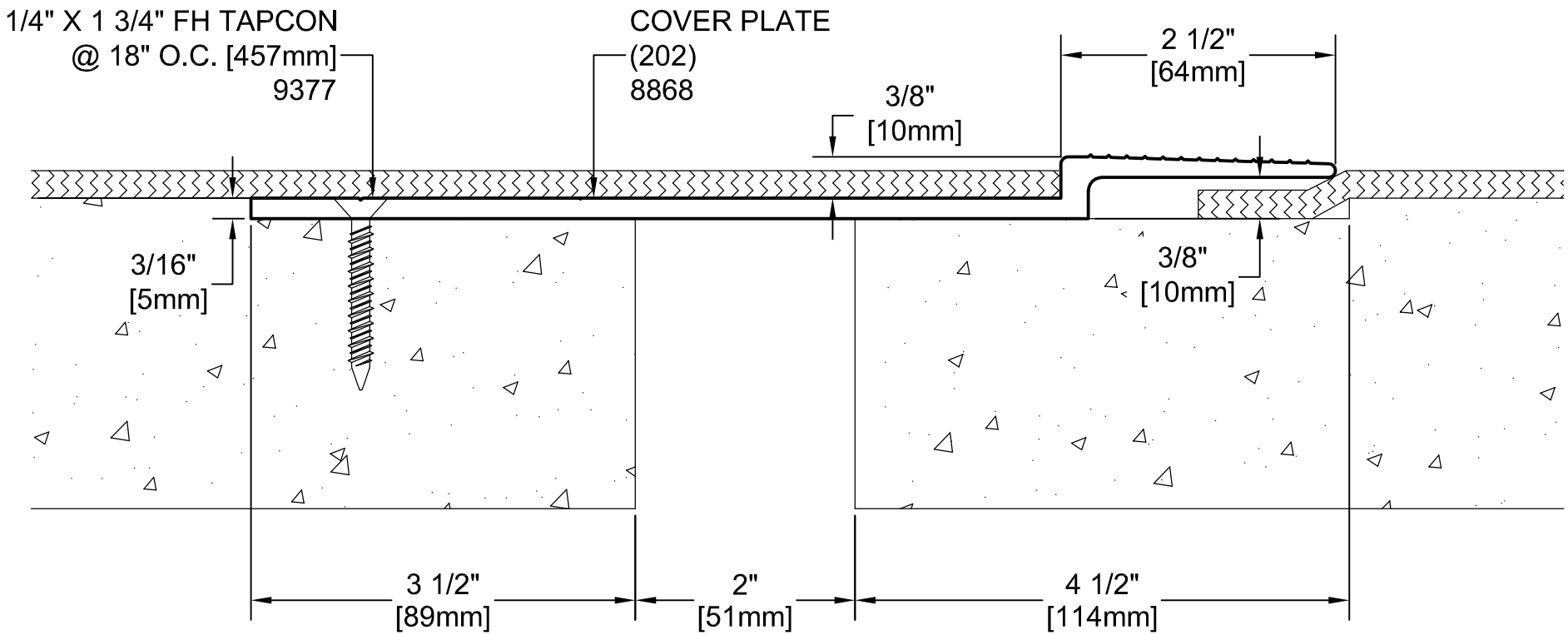

Model	Nominal "JT"	Joint Opening "JT"				Total Movement	Mat. Code
		Seismic Min.	Thermal Min.	Thermal Max.	Seismic Max.		
HCP-2-1	2"	1"	1.5"	2.5"	4"	3"	EJHS1402

Representative:	Customer:	Project:	Location:	Project Number:

M M
MM SYSTEMS
50 MM WAY
PENDERGRASS, GA. 30567
PHONE: 706-824-7500
800-241-3460
FAX: 706-824-7501
www.mmsystemscorp.com

For Spec-Data, Installation Guides, or movement requirements, contact MMSC

RIGHTS OF DESIGN

All rights of design, detail, engineering and/or invention contained herein are the property of MM Systems Corporation and hereby reserved and are not to be reproduced or provided to any other party. MM Systems Corporation reserves the right to amend or withdraw any information contained herein without notice and will not be liable for any inaccuracy or ambiguity of said information.

Model: *HCP-2-1*

Drawn by:	Scale:	Drawing Number:
LMP	NTS	EJHS1402
SHT. . OF .	Issue Date: 11-06-15	